SPECIFICATION

Current Rating:1 Amp
Voltage Rating:250V AC RMS
Dielectric Withstanding Voltage:500V AC RMS 60Hz
For 1 Minute
Contact Resistance:30 Milliohms Max. At 1 Amp DC
Insulation Resistance:1000 Megaohms Min.
At 500V DC
Temperature Range:−55˚C~+85˚C
Retention Force:460 Grams Min. Per Contact
Insertion Force:230 Grams Max. Per Contact Pair
Withdrawal Force:15 Grams Min. Per Contact Pair
Insulator:PA66+G.F.
Contact:Brass
Gold Flash On Contact Area,Tin Plated
On Solder Tails,Over Nickel
RoHS Compliant

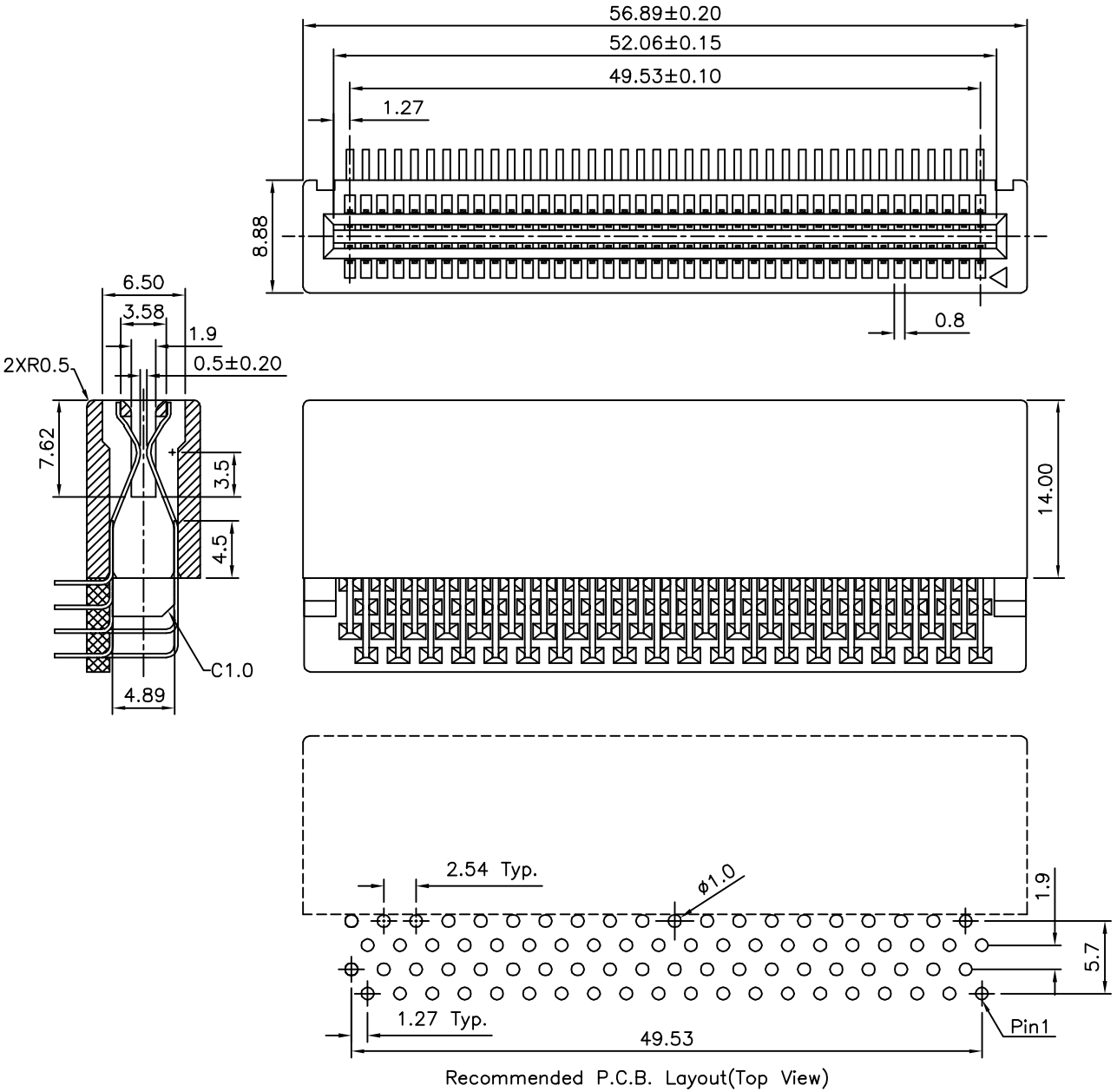

Recommended P.C.B. Layout(Top View)

NETTIGO
Odkryj tajniki elektroniki